CP AREA # T-197A
WALL MAP 2869
PLAT A8, B8
SAN JOAQUIN COUNTY

HYDROTEST T-345B-14
L-197B, MP 4.75 - 5.49

EXPENSE ORDER #41921654
CAPITAL ORDER #31032324

SCHEDULE OF SHEETS

SHEET 1 - GENERAL / CONSTRUCTION NOTES
SHEET 2 - HYDROTEST PLAN VIEW / TEST LOCATIONS
SHEET 3 - HYDROTEST PROFILE VIEW / PIPELINE FEATURES
SHEET 4 - CONSTRUCTION DETAILS - LOCATIONS A & B
SHEET 5 - CONSTRUCTION DETAILS / MATERIAL OF RECORD / BILLS OF MATERIAL

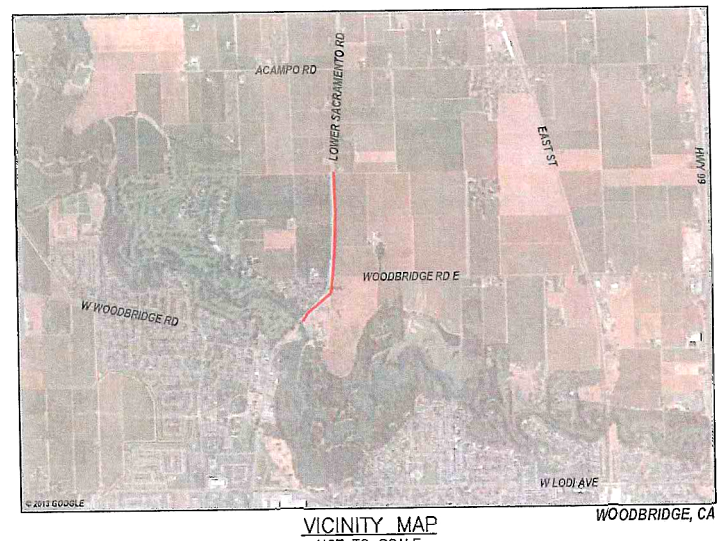

VICINITY MAP
NOT TO SCALE

SUMMARY OF PROPOSED WORK:

HYDROSTATICALLY TEST 6.625" L-197B FROM MP 4.75-MP 5.49 PER DRAWINGS AND STRENGTH TEST PRESSURE REPORTS (#41921654) AND MATERIAL OF RECORD DRAWING #41921654 SHEET 05 OF 05.

EXPENSE ORDER: #41921654:

1. INSTALL 6'-8" OF 12.750" OD x 0.281" WT, API 5L, X-52, ERW, FBE Coated PIPE.
2. INSTALL 29'-2" OF 6.625" OD x 0.280" WT, GR B, SMLS PIPE.
3. INSTALL 9'-6" OF 3.500" OD x 0.216" WT, API 5L, GR B, ERW PIPE.
4. REMOVE 5'-8" OF 12.750" OD x 0.219" WT, API 5LX-X42, ERW PIPE INSTALLED ON GM 170196 (1968).
5. REMOVE 29'-4" OF 6.625" OD x 0.188" WT, 30,000 SMYS*, ERW* PIPE INSTALLED ON GM 66400 (1941).
6. REMOVE 9'-6" OF 3.500" OD x 0.216" WT, API 5L, GR B, ERW PIPE INSTALLED ON GM135396 (1957).

CAPITAL ORDER: #31032324:

1. REMOVE ONE (1) 6" PCF, Mueller H-17256 INSTALLED ON GM 170196 (1968)
2. REMOVE ONE (1) 6" PCF, Mueller H-17256 INSTALLED ON GM 135396 (1957)
3. REMOVE 8'-1" OF 6.625" OD x 0.188" WT, 30,000 SMYS*, ERW* PIPE INSTALLED ON GM 66400 (1941).

SEQUENCE OF OPERATIONS:

1. PRIOR TO TAKING PIPELINE CLEARANCE THE FOLLOWING MUST BE PERFORMED:
   A. PG&E T&R TO CHECK ANY DRIPS IN SHUT-IN SEGMENT FOR PRESENCE OF PIPELINE LIQUIDS.
   B. H-FORM INSPECTION TO BE PERFORMED ON PIPELINE BY PG&E APPROVED VENDOR. PERFORM H-FORM INSPECTION PRIOR TO REMOVAL OF CUT-OUT SECTION.
   D. PERFORM H-FORM INSPECTION AS DESIGNATED ON DRAWINGS AT LOCATION B. IF UT W.T. MEASUREMENTS IN SECTION 2.5 DO NOT MATCH EXISTING PIPE SPECIFICATIONS AS SHOWN ON DRAWINGS, IMMEDIATELY NOTIFY ENGINEER.
   E. CONTRACTOR TO REMOVE PIPE WRAP FROM CUT OUT SECTIONS EXTENDING 1' BEYOND EACH END OF THE CUT-OUT AND SANDBLAST TO NEAR WHITE WHERE DESIGNATED ON DRAWINGS FOR H-FORM INSPECTION.
   F. COMPLETE A-FORMS ON ALL EXPOSED PIPE AND INCLUDE IN AS-BUILT PACKAGE. IF UT W.T. MEASUREMENTS DO NOT MATCH EXISTING PIPE SPECIFICATIONS AS SHOWN ON DRAWING, IMMEDIATELY NOTIFY ENGINEER.
   G. G.C. GAS TO INSTALL SAVE-A-VALVES FOR OIL TESTING AND SNIFF HOLES WHERE DESIGNATED IN THE TIE-IN PROCEDURE. G.C. GAS FOREMAN TO CONFIRM LOCATION AND NUMBER OF SAVE-A-VALVE LOCATIONS AND ENSURE WELD PRESSURE CALCULATIONS ARE PROVIDED BY ENGINEERING PRIOR TO WELDING SAVE-A-VALVES ON PIPELINE.
2. AFTER CLEARANCE CONTRACTOR TO TRANSPORT 3' OF EACH H-FORM TESTED PIPE SEGMENT TO 2000 CROWS LANDING RD., MODESTO. UTILIZE CHAIN OF CUSTODY PROCESS FOR ALL SHIPMENTS.
3. UPON ARRIVAL AT MODESTO, ATS TO PERFORM FURTHER TESTING AND ANALYSIS OF CUT-OUT SECTIONS.
4. SEE T-345B-14 HYDROSTATIC TEST PROCEDURE FOR SEQUENCING OF HYDROSTATIC TEST TASKS.

CONSTRUCTION NOTES:

1. WELDING REQUIREMENTS:
   -ALL ARC WELDING IS TO BE PERFORMED IN ACCORDANCE WITH GAS STANDARD D-22.
   -ALL CANS AND SPOOLS SHALL BE A MINIMUM LENGTH OF ONE DIAMETER, WHEREVER POSSIBLE.
   -EXISTING TIE-IN WELDS SHALL BE IDENTIFIED AND REMOVED IF PRACTICAL.
   -WHEN 16" AND LARGER VALVES AND FITTINGS ARE WELDED TO EACH OTHER OR TO PIPE, THE JOINT SHALL HAVE A TWO PASS WELD ON THE INSIDE, AS WELL AS THE OUTSIDE WELD, IF THE INTERNAL MISALIGNMENT EXCEEDS 0.094". THIS REQUIREMENT ALSO APPLIES TO SMALLER DIAMETER VALVES AND FITTING WHEN IT IS PRACTICAL.
2. HYDROSTATIC TEST REQUIREMENTS:
   -HYDROSTATIC TESTING SHALL MEET PRESSURE AND DURATION REQUIREMENTS OF GAS STANDARD A-34 AND SHALL BE CONDUCTED IN ACCORDANCE WITH GAS STANDARDS TD-4137S, TD-4137P-01, TD-4137P-02 & TD-4137P-03.
   -SEE ATTACHED STPR AND SITE SPECIFIC TEST PROCEDURE.
3. ALL WELDS THAT HAVE NOT BEEN HYDROTESTED AND ALL NON-WELDED FITTINGS SHALL BE SOAP TESTED AT 100 PSIG AND OPERATING PRESSURE.
4. PAINTING AND COATING REQUIREMENTS:
   ALL EXPOSED PIPE AND FITTINGS ARE TO BE PAINTED IN ACCORDANCE WITH GAS STANDARD E-30. ALL COATING ON BURIED PIPE AND FITTINGS ARE TO BE APPLIED IN ACCORDANCE WITH GAS STANDARD E-35. FOR COATING SELECTIONS ON BURIED PIPE SEE DIRECT BURIAL SELECTIONS TABLE.
5. CALL USA AT LEAST TWO WORKING DAYS PRIOR TO EXCAVATION (811).
6. LOCATION OF EXISTING SUBSTRUCTURES ARE APPROXIMATE. BEFORE POWER OR HEAVY EQUIPMENT IS USED FOR EXCAVATION, THE EXACT DEPTH AND LOCATION OF SUBSTRUCTURES SHALL FIRST BE DETERMINED BY HAND EXCAVATION, IF NECESSARY.
7. ALL BELL HOLES SHALL BE EXCAVATED TO THE FOLLOWING MINIMUM DIMENSIONS: BELL HOLE SHALL EXTEND MINIMUM 4' LONGITUDINALLY BEYOND WELD/CUT LINES ON EITHER SIDE; BELL HOLE SHALL EXTEND MINIMUM 2.5' BEYOND SIDE WALL OF PIPE AND SHALL PROVIDE FOR MINIMUM 2' CLEARANCE BELOW BOTTOM OF PIPE WALL FOR ENTIRE EXPOSED LENGTH. ANY DEVIATION TO THESE DIMENSIONS MUST BE APPROVED BY PG&E CONSTRUCTION MANAGER.

CONSTRUCTION NOTES (CONTINUED):

8. ALL BENDS ARE SMOOTH FIELD BENDS EXCEPT WHERE ELBOWS ARE NOTED. FIELD BEND SHALL BE MADE IN ACCORDANCE WITH GAS STANDARD A-36 SECTION 4-D.
9. ALL ANGLES SHOWN IN THE PLAN AND PROFILE ARE APPROXIMATE AND SHALL BE CUT TO SUIT FIELD CONDITION.
10. THIS PIPELINE MUST BE INSTALLED WITH AT LEAST 12 INCHES OF CLEARANCE FROM ANY OTHER UNDERGROUND STRUCTURE NOT ASSOCIATED WITH THE PIPELINE.
11. COATING REMOVAL:
    BEFORE REMOVING THE PIPE COATING ON PRE-1972 PIPE (DOES NOT INCLUDE PLASTIC TAPE OR FUSION BONDED EPOXY COATINGS) THE FOLLOWING STEPS SHALL BE TAKEN:
    -FOR ALL NON-EMERGENCY WORK, PRE-1972 PIPE WRAP MUST BE EVALUATED TO DETERMINE IF IT CONTAINS ASBESTOS PRIOR TO REMOVAL.
    -FOR EMERGENCY WORK ON PRE-1972 PIPE, ASSUME THE WRAP CONTAINS > 1% ASBESTOS UNTIL THE WRAP CAN BE TESTED.
    -OBTAIN SAMPLES OF THE WRAP, AND HAVE SAMPLES TESTED FOR ASBESTOS IN ACCORDANCE WITH WP 4711-01.
    -TEST RESULTS ARE TO BE INCLUDED WITH AS-BUILTS.
    -FOLLOW PROCEDURE IN WP 4711-01 FOR REMOVAL OF PIPE WRAP.
12. BONDING CABLES TO BE INSTALLED ACROSS PIPELINE CUT-OUTS AT ALL LOCATIONS THE PIPELINE IS SEVERED PRIOR TO REMOVAL. CHAIN CLAMPS, MAGNETIC CLAMPS, OR OTHER CONSTRUCTION MANAGEMENT APPROVED CLAMPS AND #6 (MIN.) STRANDED COPPER CABLE SHALL BE UTILIZED. CLAMPS TO REMAIN IN PLACE UNTIL PIPELINE IS TIED IN.
13. ALL BALL VALVES USED FOR TAPS IN HYDROTEST SECTION ARE TO BE CLOSED 50% FROM FULL OPEN POSITION PRIOR TO FILL AND FOR DURATION OF HYDROTEST. ALL PLUG VALVES USED FOR TAPS/BLOWOFFS IN HYDROTEST SECTION ARE TO BE IN FULL OPEN POSITION PRIOR TO FILL AND FOR DURATION OF HYDROTEST UNLESS SPECIFICALLY CALLED OUT TO BE IN CLOSED POSITION ON DRAWING.
14. ALL EXCAVATIONS WITHIN EXISTING STATIONS SHALL BE HAND DUG OR EXCAVATED USING SOFT DIG METHODS (e.g. VACUUM EXCAVATIONS OR SIMILAR).
15. COPIES OF REFERENCE DRAWINGS ARE AVAILABLE TO FIELD PERSONNEL (PG&E, INSPECTION OR CONTRACTOR) ON AN AS NEEDED BASIS. CONTACT THE ASSIGNED ENGINEER IDENTIFIED IN CONTACTS TO OBTAIN COPIES OF ANY REFERENCE DRAWINGS.
16. RETIRED PIPE SHALL BE PURGED ACCORDING TO A-38. FIELD TO VERIFY IF LIQUIDS ARE PRESENT IN PIPE. IF LIQUIDS ARE PRESENT, RETIRED PIPE SHALL BE PIGGED.

GENERAL NOTES:

1. THIS DRAWING HAS BEEN CREATED BY REVIEW OF THE AS-BUILT DRAWINGS & RECORDS. ACCURACY IS DEPENDENT UPON THE SOURCE DOCUMENTS LISTED ON THE REFERENCE DRAWINGS.
2. "R" STATIONING ON THIS DRAWING DENOTES "REFERENCE" STATIONING AND IS A RESULT OF PG&E GIS SHAPEFILE OVERLAID UPON GOOGLE EARTH IMAGERY AND MIGHT NOT ACCURATELY DEPICT EXACT DISTANCES. FIELD VERIFY ALL DISTANCES.
3. DISTANCES TO ALL UTILITIES SHOWN ON DRAWING ARE APPROXIMATE BASED UPON REVIEW OF PG&E & OTHER UTILITY/AGENCY DRAWINGS & AS-BUILTS. CONTRACTOR TO CALL USA TO HAVE LOCATION OF THESE FACILITIES MARKED AND POTHOLE TO EXPOSE/VERIFY LOCATION.

CONTACT INFORMATION:

CONSTRUCTION MANAGER	_____ _____	(___) ___-____
T&R SUPERVISOR	DAVID DURHAM	(209) 932-6555
CLEARANCE SUPERVISOR	DAVID DURHAM	(209) 932-6555
PROJECT COORDINATOR	BEN KIMBALL	(707) 207-5498
LEAD ENGINEER	DIRK AYALA	(530) 635-2423
ENGINEER	JOSEPH BARNASH	(951) 436-8450
H-FORM	KENJI GAILEY, GE	(907) 360-1887
MATERIALS (PIPE)	MICHAEL LACHINA	(510) 468-1924
MATERIALS (FITTINGS)	MICHAEL DE HART	(209) 728-4603
MATERIALS CHAIN OF CUSTODY	MICHAEL PAINTER	(209) 275-7241
CORROSION ENGINEER	JONATHAN RIGOTTI	(530) 902-0147

CONTRACTOR

WELDING INSPECTED PER PG&E GAS STANDARD TD-4160M
VISUAL _____ ☐
MAGNETIC PARTICLE _____ ☐
INSPECTOR _____
DATE _____

G.C. GAS

WELDING INSPECTED PER PG&E GAS STANDARD TD-4160M
VISUAL _____ ☐
MAGNETIC PARTICLE _____ ☐
INSPECTOR _____
DATE _____

DIRECT BURIAL COATING SELECTIONS
LISTED IN ORDER OF PREFERENCE

MAIN LINE COATING	FBE		
MINOR REPAIRS	PROTAL 7200, POWERCRETE J, FBE MELT STICK, 3M SCOTCHKOTE 323		
TIE-IN WELDS	3M SCOTCHKOTE 323, PROTAL 7200, FBE, POWERCRETE J		
GIRTH WELDS	3M SCOTCHKOTE 323, PROTAL 7200, FBE, POWERCRETE J		
BUTT WELDED FITTINGS	3M SCOTCHKOTE 323, PROTAL 7200, FBE, POWERCRETE J		
VALVE ASSEMBLIES	3M SCOTCHKOTE 323, PROTAL 7200, DEVGRIP 238		
SHORT SEGMENTS OF PIPE	3M SCOTCHKOTE 323, PROTAL 7200, FBE, POWERCRETE J		
AIR-TO-SOIL TRANSITIONS	DEVGRIP 238, POWERCRETE J		
PRESSURE CONTROL FITTINGS	BODY 3M SCOTCHKOTE 323	FLANGE WAX TAPE	
TIE-INS/COATING TRANSITIONS	PROTAL 7200, WAX TAPE		

BORED COATING SELECTIONS
LISTED IN ORDER OF PREFERENCE

MAIN LINE COATING	ARC APPLIED OVER FBE
MINOR REPAIRS	PROTAL 7200, POWERCRETE J
GIRTH WELDS	PROTAL 7200, POWERCRETE J, 3M SCOTCHKOTE 323

NOTES:
1) CONTACT THE RESPONSIBLE PIPELINE ENGINEER TO REQUEST A VARIANCE FROM THE ABOVE COATING SELECTIONS
2) ALL COATINGS ARE TO BE APPLIED IN ACCORDANCE WITH GS&S E-30 AND E-35

DESIGN & CONSTRUCTION REVIEW FOR INTERNAL CORROSION

DESCRIPTION	ACTION SELECTED	INITIAL	DATE
CORROSION ENGINEER HAS REVIEWED THIS LOCATION AND THERE IS NO KNOWN THREAT OF INTERNAL CORROSION. NO INTERNAL CORROSION DESIGN OR CONSTRUCTION CONSIDERATIONS ARE NECESSARY.			
INTERNAL CORROSION MAY BE A THREAT AND THE CONSTRUCTION DESIGNS HAVE BEEN REVIEWED WITH CORROSION ENGINEERING. DOCUMENTATION OF THE REVIEW AND ACTIONS TAKEN ARE IN THE JOB PACKAGE AND INCORPORATED IN THIS DESIGN.			

NOTIFIED U.S.A.
DATE
TICKET NUMBER
BY

Installation Tested or Inspected and Noted on Drawing. All Levels Satisfactory per PG&E GS&S 0-16
Qualified Employee Date
Corrosion mechanic's signature is required when a CPA boundary is within the scope of the project

REFERENCE DRAWINGS:

385163	-	OPERATING MAP LAS VINAS STA TO CALAVERAS CEMENT, L-197, CHANGE 50
385934	-	12" LINE 197, RELOCATION LOWER SACRAMENTO RD WOODBRIDGE, GM 170196.
381974	-	6" LINE 197 LAS VINAS TO CALAVERAS CEMENT GM 66400.
482569	-	INSTALLATION OF MLV AND CROSSOVER NEAR ACAMPO 10" MAIN L-197.
MAOP00300161	-	REPLACE 1550' FT 6" WITH 1730 FT 12" TRANSMISSION MAIN, LOWER SACRAMENTO RD.
30944550	-	HPR REPLACEMENT LOWER SACRAMENTO & WOODBRIDGE.
MAOP23065900	-	INSTALL LO-HP-89, PM 30045038, (SHEET 24 OF 24)
197B_MP0.0355_H-FORM_22JUL2012_41656204.PDF	-	TIM-169-12 H-FORM FOR 6" L-197B.

SAFETY
SAFETY PLEDGE
I ALWAYS PUT SAFETY FIRST.
I LOOK FOR AND ACT TO RESOLVE UNSAFE SITUATIONS.
I HELP AND ENCOURAGE OTHERS TO ACT SAFELY.

GTS
575 Lennon Ln. #250
Walnut Creek, CA (925) 476-8530
www.gtsinc.us
Project No. 13155

ISSUED FOR PERMIT
NOT APPROVED FOR CONSTRUCTION

NOTE:
WARNING: CONFIDENTIAL, PROPRIETARY INFORMATION THIS DOCUMENT CONTAINS CONFIDENTIAL, PROPRIETARY INFORMATION THAT IS THE SOLE PROPERTY OF PACIFIC GAS AND ELECTRIC COMPANY AND IS INTENDED FOR USE ONLY BY AUTHORIZED PACIFIC GAS AND ELECTRIC COMPANY EMPLOYEES & AGENTS. COPYRIGHT PACIFIC GAS AND ELECTRIC COMPANY.

811 Know what's below. Call before you dig.

NO.	DATE	DESCRIPTION	GM/SPEC	DWN	CHKD	SUPV	APVD BY
A		ISSUED FOR PERMIT	41921654				

REVISIONS

EXPENSE PSRS# 30925
CAPITAL PSRS# 32136

APPROVED BY	
GM	41921654
SUPV	
DSGN	
DWN	DWY
CHKD	JAB
OK	DAA
DATE	
SCALES	AS SHOWN

HYDROTEST T-345B-14
L-197B
MP 4.75 - 5.49
WOODBRIDGE, CALIFORNIA

PACIFIC GAS AND ELECTRIC COMPANY
SAN RAMON, CALIFORNIA

BILL OF MATL	SHEET 05
DWG LIST	
SUPSDS	
SUPSD BY	
SHEET NO.	01 OF 05 SHEETS

41921654 A

PLAN VIEW
(SCALE: 1" = 200')

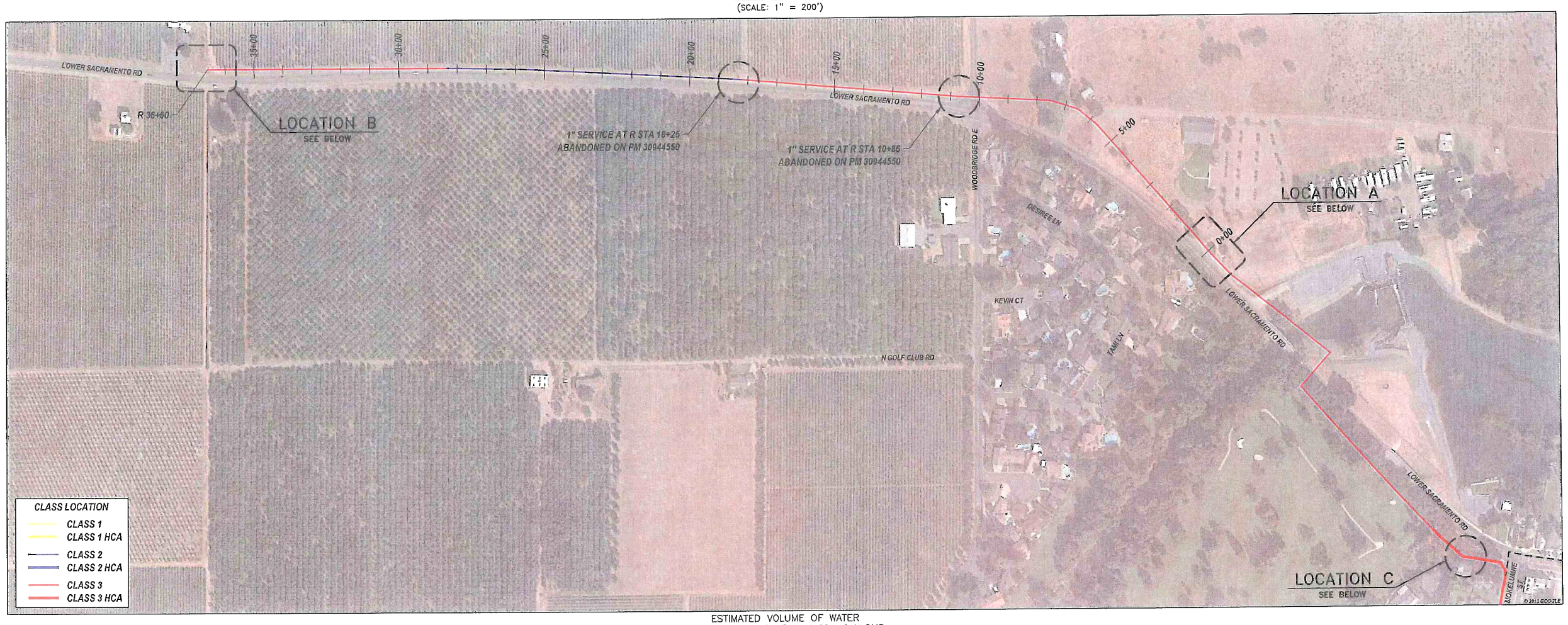

ESTIMATED VOLUME OF WATER
LOCATION A TO B TEST: 6,000 GALLONS.

LOCATION B
LOWER SACRAMENTO RD & L-197B MLV 5.19
WALL MAP – 2869; PLAT – A8; BLOCK – 3; MP – 5.49
(SCALE: 1" = 50')

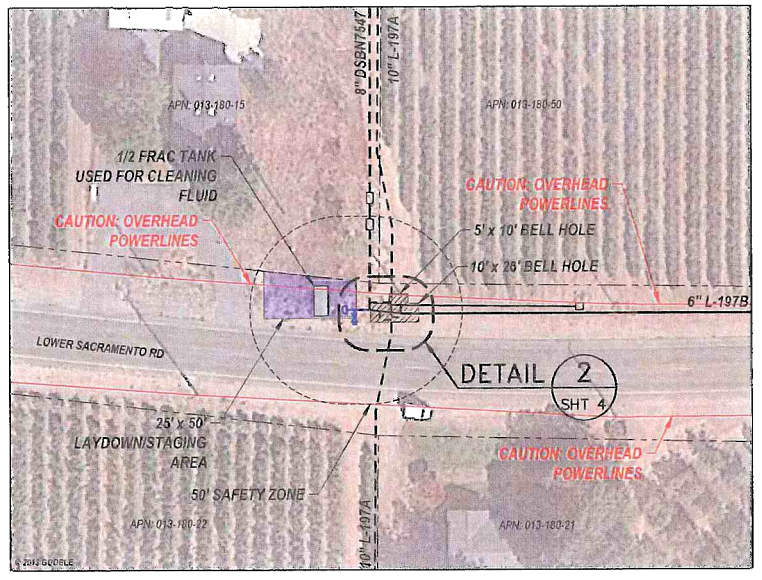

LOCATION C
19071 LOWER SACRAMENTO RD
WALL MAP – 2869; PLAT – B8; BLOCK – 9; MP – 4.45
(SCALE: 1" = 60')

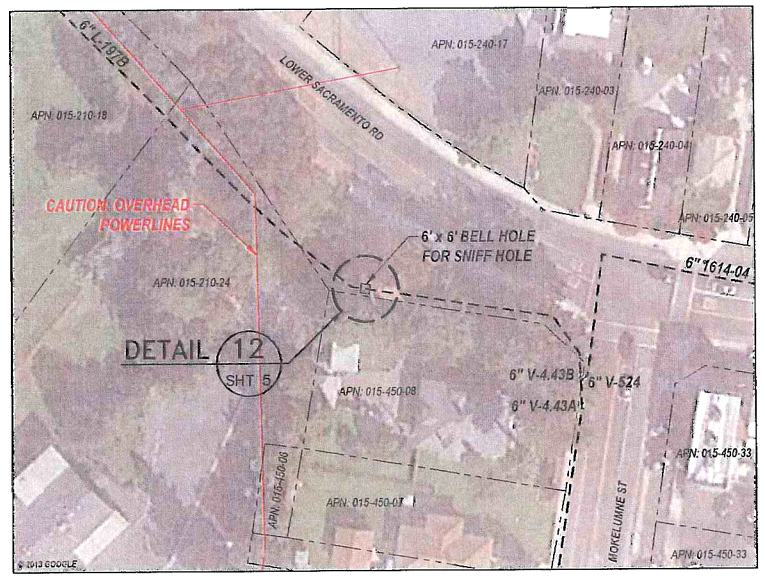

LOCATION A
19350 LOWER SACRAMENTO RD
WALL MAP – 2869; PLAT – B8; BLOCK – 9; MP – 4.75
(SCALE: 1" = 60')

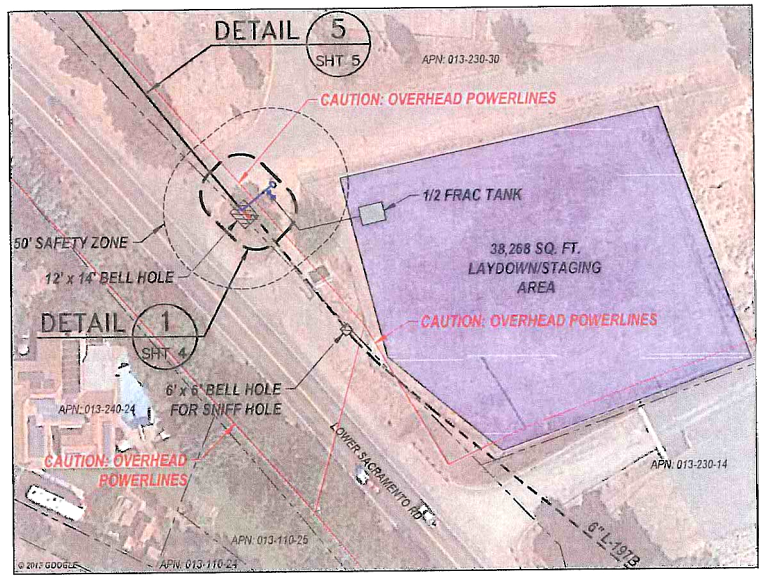

SAFETY
SAFETY PLEDGE
I ALWAYS PUT SAFETY FIRST.
I LOOK FOR AND ACT TO
RESOLVE UNSAFE SITUATIONS.
I HELP AND ENCOURAGE
OTHERS TO ACT SAFELY.

GTS
575 Lennon Ln. #250
Walnut Creek, CA (925) 478-8530
www.gtsinc.us
Project No. 13195

ISSUED FOR PERMIT
NOT
APPROVED FOR CONSTRUCTION

NOTE:
WARNING: CONFIDENTIAL, PROPRIETARY INFORMATION THIS DOCUMENT CONTAINS CONFIDENTIAL, PROPRIETARY INFORMATION THAT IS THE SOLE PROPERTY OF PACIFIC GAS AND ELECTRIC COMPANY AND IS INTENDED FOR USE ONLY BY AUTHORIZED PACIFIC GAS AND ELECTRIC COMPANY EMPLOYEES & AGENTS. COPYRIGHT PACIFIC GAS AND ELECTRIC COMPANY

811 Know what's below. Call before you dig.

NO.	DATE	DESCRIPTION	CM/SPEC	DWN	CHK'D	SUPV	APVD BY
A		ISSUED FOR PERMIT	41921654				

REVISIONS

APPROVED BY
GM 41921654
SUPV
DSGN
DWN DWY
CHK'D JAB
OK DAA
DATE
SCALES AS SHOWN

HYDROTEST T-345B-14
L-197B
MP 4.75 – 5.49
WOODBRIDGE, CALIFORNIA

PACIFIC GAS AND ELECTRIC COMPANY
SAN RAMON, CALIFORNIA

BILL OF MATL SHEET 05
DWG LIST
SUPSDS
SUPSD BY
SHEET NO. 02 OF 05 SHEETS
41921654 A

PROFILE VIEW

(HORIZONTAL SCALE: 1" = 200')
(VERTICAL SCALE: 1" = 20')

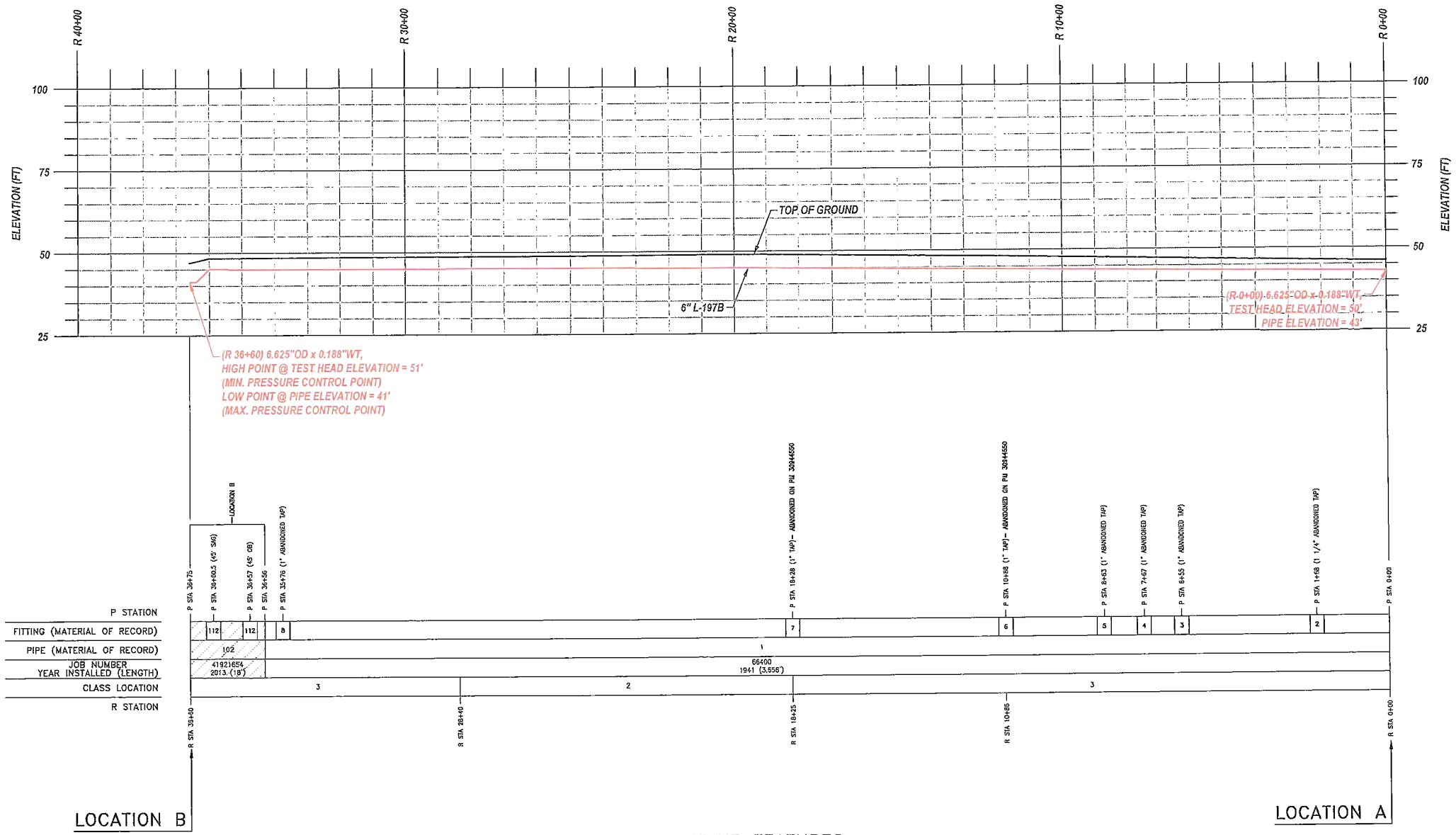

SECTION TO BE INSTALLED PRIOR TO HYDROTEST

PIPELINE FEATURES

SEE MATERIAL OF RECORD ON SHEET 5 OF 5
(NOT TO SCALE)

LOCATION	R STA.	ELEV.	SPIKE PRESSURE	MIN. PRESS	MAX. PRESS
MIN. PRESSURE CONTROL POINT	36+60	51'	863 psig	750 psig	
MAX. PRESSURE CONTROL POINT	36+60	41'	868 psig		781 psig
LOCATION A (TEST LOCATION)	0+00	50'	864 psig	751 psig	777 psig
LOCATION B	36+60	51'	863 psig	750 psig	776 psig

NOTE: ELEVATIONS AT TEST LOCATIONS ASSUME TOP OF HYDROTEST PIPING IS 4' ABOVE GROUND ELEVATION

SAFETY

SAFETY PLEDGE

I ALWAYS PUT SAFETY FIRST.
I LOOK FOR AND ACT TO RESOLVE UNSAFE SITUATIONS.
I HELP AND ENCOURAGE OTHERS TO ACT SAFELY.

GTS
575 Lennon Ln. #250
Walnut Creek, CA (925) 478-8530
www.gtsinc.us
Project No. 13195

ISSUED FOR PERMIT
NOT
APPROVED FOR CONSTRUCTION

NOTE:
WARNING: CONFIDENTIAL, PROPRIETARY INFORMATION THIS DOCUMENT CONTAINS CONFIDENTIAL, PROPRIETARY INFORMATION THAT IS THE SOLE PROPERTY OF PACIFIC GAS AND ELECTRIC COMPANY AND IS INTENDED FOR USE ONLY BY AUTHORIZED PACIFIC GAS AND ELECTRIC COMPANY EMPLOYEES & AGENTS. COPYRIGHT PACIFIC GAS AND ELECTRIC COMPANY.

811 Know what's below. Call before you dig.

NO.	DATE	DESCRIPTION	GM/SPEC	DWN	CHKD	SUPV	APVD BY
A		ISSUED FOR PERMIT	41921654				

REVISIONS

APPROVED BY	
GM	41921654
SUPV	
DSGN	
DWN	DWY
CHKD	JAB
OK	DAA
DATE	
SCALES	AS SHOWN

HYDROTEST T-345B-14
L-197B
MP 4.75 - 5.49
WOODBRIDGE, CALIFORNIA

PACIFIC GAS AND ELECTRIC COMPANY
SAN RAMON, CALIFORNIA

BILL OF MATL SHEET	05
DWG LIST	
SUPSDS	
SUPSD BY	
SHEET NO.	03 OF 05 SHEETS

41921654 A

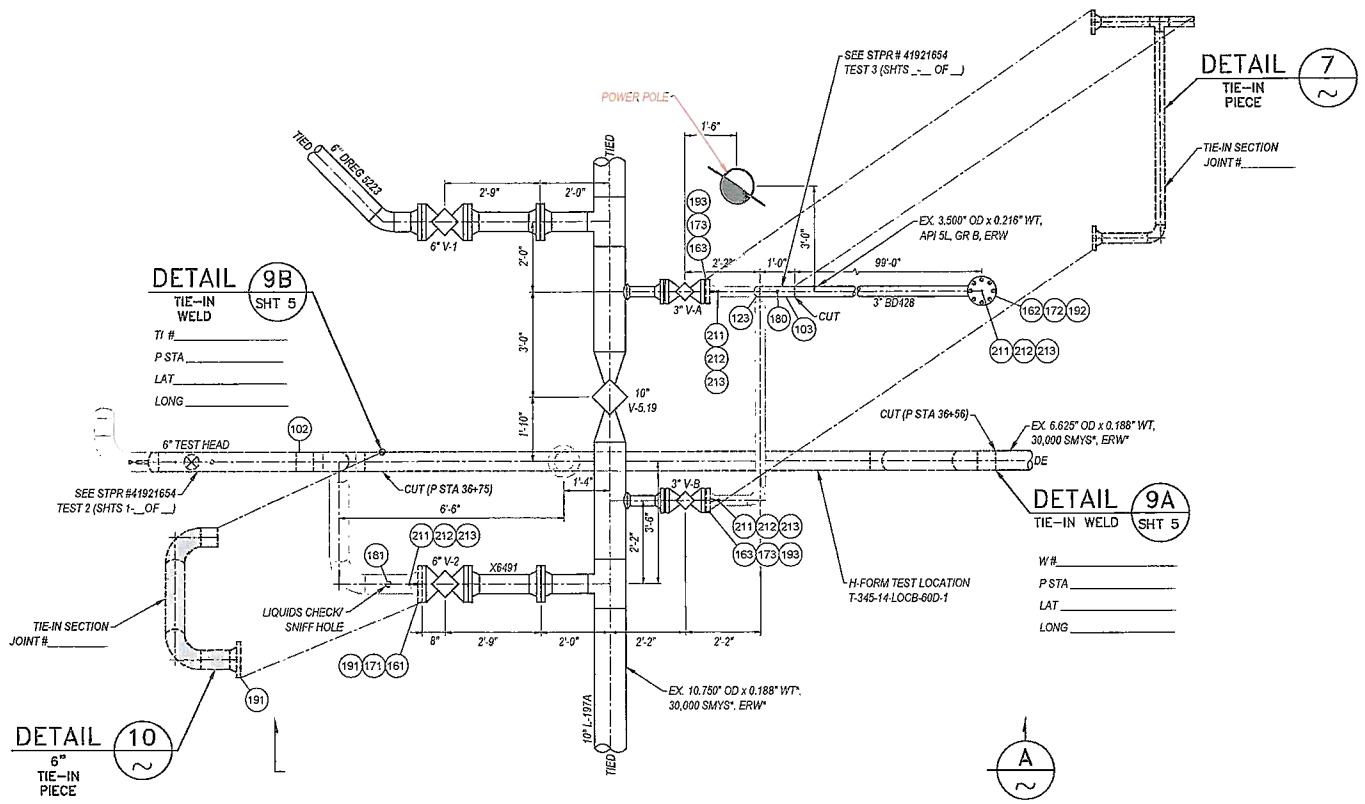

DETAIL 2 HYDROTEST CONFIGURATION
SCALE: 3/8" = 1' SHT 2 LOC B: LOWER SACRAMENTO RD & L-197B MLV 5.19

NOTE: PCF REMOVALS DEPICTED IN DETAILS 1&2 & STUB REMOVAL DEPICTED IN DETAIL 2 TO BE CHARGED TO CAPITAL ORDER # 31032324

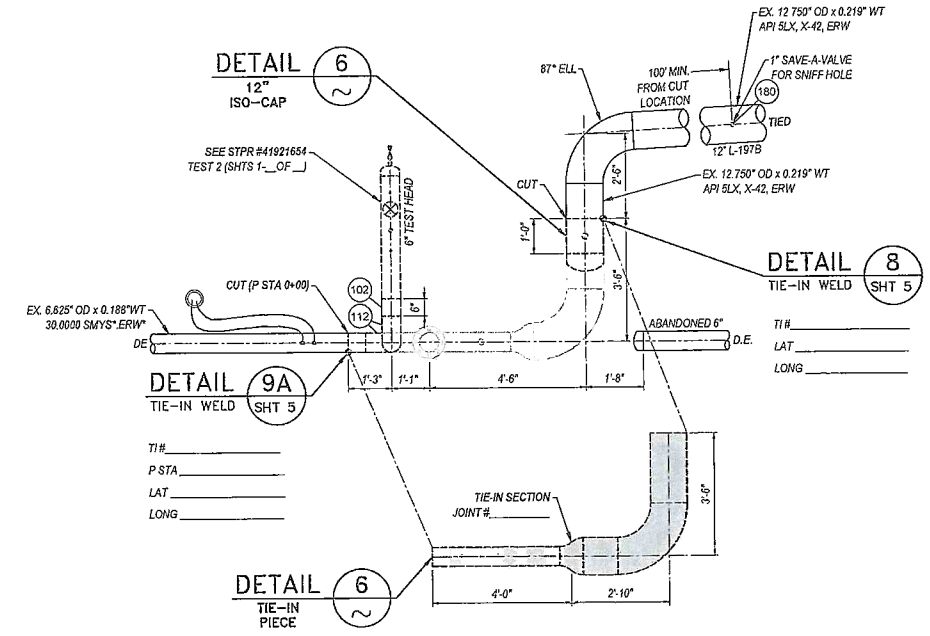

DETAIL 1 SHT 2 HYDROTEST CONFIGURATION
SCALE: 3/8" = 1' LOC A: 19350 LOWER SACRAMENTO RD

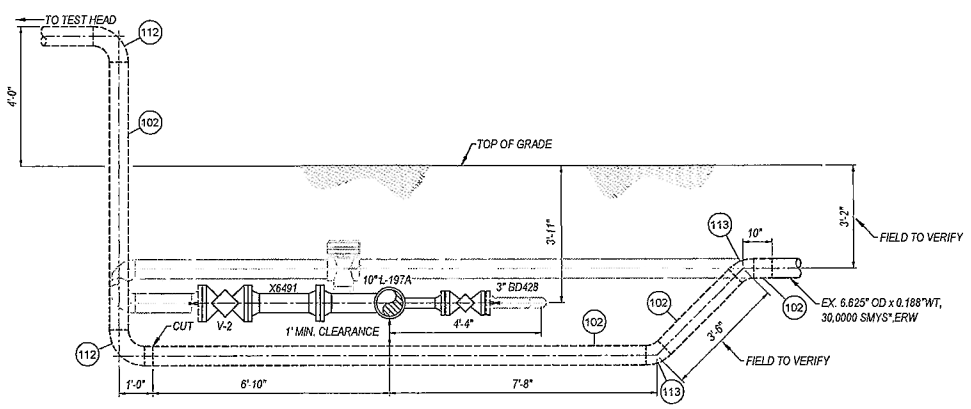

SECTION A
SCALE: 3/8" = 1'

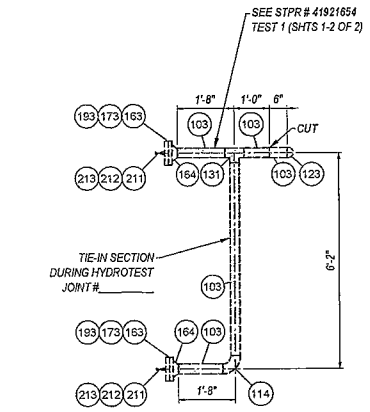

DETAIL 7 3" TIE-IN PIECE
SCALE: 3/8" = 1' HYDROTEST CONFIGURATION

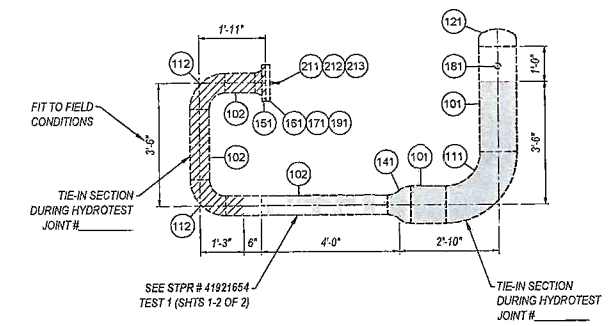

DETAIL 6 12" x 6" TIE-IN PIECE & ISOLATION CAP
SCALE: 3/8" = 1' HYDROTEST CONFIGURATION

GM 170196 (1968)

EXIST PIPE SPECS
HEADER SIZE: 12.750"
PIPE SPECS: API 5LX, X-42, ERW
WALL THICKNESS: 0.219"
PRESENT MAOP: 388
% SMYS @ MAOP: 26.89

MAXIMUM ALLOWABLE PRESSURE DURING WELDING (G.S.&S. D-22)
EVALUATE THE FOLLOWING OPERATING PRESSURE LIMITATIONS TO DETERMINE THE MAXIMUM ALLOWABLE PRESSURE PERMITTED DURING WELDING
A) (388 PSIG) WHEN WELDING ON BODY OF THE PIPE, UNLESS,
B) (288 PSIG) WHEN WELDING WITHIN 3" OF THE LONGITUDINAL SEAM (EXCEPT FOR THE LONGITUDINAL SEAM), OR WITHIN 3" OF ANY BRANCH WELD, OR WITHIN 3" OF ANY DEFECT (GROOVE, CORROSION, LAMINATION), TO THE PIPE WHICH EXCEEDS 40 PERCENT OF THE NOMINAL WALL THICKNESS (0.087") AND/OR 1 1/4" OF THE NOMINAL PIPE DIAMETER IN LENGTH.

GM 66400 (1941)

EXIST PIPE SPECS
HEADER SIZE: 6.625
PIPE SPECS: 30,000 SMYS*, ERW
WALL THICKNESS: 0.188"
PRESENT MAOP: 388
% SMYS @ MAOP: 22.79

MAXIMUM ALLOWABLE PRESSURE DURING WELDING (G.S.&S. D-22)
EVALUATE THE FOLLOWING OPERATING PRESSURE LIMITATIONS TO DETERMINE THE MAXIMUM ALLOWABLE PRESSURE PERMITTED DURING WELDING
A) (388 PSIG) WHEN WELDING ON BODY OF THE PIPE, UNLESS,
B) (340 PSIG) WHEN WELDING WITHIN 3" OF THE LONGITUDINAL SEAM (EXCEPT FOR THE LONGITUDINAL SEAM), OR WITHIN 3" OF ANY BRANCH WELD, OR WITHIN 3" OF ANY DEFECT (GROOVE, CORROSION, LAMINATION), TO THE PIPE WHICH EXCEEDS 40 PERCENT OF THE NOMINAL WALL THICKNESS (0.087") AND/OR 1 1/4" OF THE NOMINAL PIPE DIAMETER IN LENGTH.

NOTE:
WARNING: CONFIDENTIAL, PROPRIETARY INFORMATION THIS DOCUMENT CONTAINS CONFIDENTIAL, PROPRIETARY INFORMATION THAT IS THE SOLE PROPERTY OF PACIFIC GAS AND ELECTRIC COMPANY AND IS INTENDED FOR USE ONLY BY AUTHORIZED PACIFIC GAS AND ELECTRIC COMPANY EMPLOYEES & AGENTS. COPYRIGHT PACIFIC GAS AND ELECTRIC COMPANY.

811 Know what's below. Call before you dig.

NO.	DATE	DESCRIPTION	GM/SPEC	DWN	CHKD	SUPV	APVD BY
A		ISSUED FOR PERMIT	41921654				

REVISIONS

APPROVED BY	
GM	41921654
SUPV	
DSGN	
DWN	DWY
CHKD	JAB
	OK DAA
DATE	
SCALES	AS SHOWN

HYDROTEST T-345B-14
L-197B
MP 4.75 - 5.49
WOODBRIDGE, CALIFORNIA

PACIFIC GAS AND ELECTRIC COMPANY
SAN RAMON, CALIFORNIA

BILL OF MATL SHEET 05	
DWG LIST	
SUPSDS	
SUPSD BY	
SHEET NO. 04 OF 05 SHEETS	
41921654	A

TEST 2

JOB NO.	41921654
BOM #	102
DESIGN CRITERIA	
LOCATION CLASS	3
DESIGN FACTOR	0.5
FDP	720 PSIG 24.34 % SMYS
MAOP	388 PSIG 13.11 % SMYS
STRENGTH TEST PRESSURE	
MAX.	1100 PSIG 37.18 % SMYS
MIN.	1080 PSIG 36.51 % SMYS
	2663 PSIG=90% SMYS
TEST MEDIUM	WATER
PIPE SPEC	API 5L, GR B, SMLS
O.D.	6.625"
W.T.	0.280"

WELD INSPECTION (GAS STD.D-40)*
☒ RADIOGRAPHIC:
☐ 20% MIN. (% OF EACH WELDER'S
☒ 100% DAILY WORK)
*VISUALLY INSPECT 100% OF ALL WELDS THAT ARE NOT RADIOGRAPHICALLY INSPECTED. (THIS REQUIREMENT APPLIES EVEN IF NO RADIOGRAPHIC INSPECTION IS REQUIRED.)

TEST 1 & 3

JOB NO.	41921654
BOM #	101
DESIGN CRITERIA	
LOCATION CLASS	3
DESIGN FACTOR	0.5
FDP	720 PSIG 31.41 % SMYS
MAOP	388 PSIG 16.93 % SMYS
STRENGTH TEST PRESSURE	
MAX.	1100 PSIG 47.99 % SMYS
MIN.	1080 PSIG 47.12 % SMYS
	2063 PSIG=90% SMYS
TEST MEDIUM	WATER
PIPE SPEC	API 5L, X-52, ERW
O.D.	12.750"
W.T.	0.281"

WELD INSPECTION (GAS STD.D-40)*
☒ RADIOGRAPHIC:
☐ 20% MIN. (% OF EACH WELDER'S
☒ 100% DAILY WORK)
*VISUALLY INSPECT 100% OF ALL WELDS THAT ARE NOT RADIOGRAPHICALLY INSPECTED. (THIS REQUIREMENT APPLIES EVEN IF NO RADIOGRAPHIC INSPECTION IS REQUIRED.)

JOB NO.	41921654
BOM #	102
DESIGN CRITERIA	
LOCATION CLASS	3
DESIGN FACTOR	0.5
FDP	720 PSIG 24.34 % SMYS
MAOP	388 PSIG 13.11 % SMYS
STRENGTH TEST PRESSURE	
MAX.	1100 PSIG 37.18 % SMYS
MIN.	1080 PSIG 36.51 % SMYS
	2663 PSIG=90% SMYS
TEST MEDIUM	WATER
PIPE SPEC	API 5L, GR B, SMLS
O.D.	6.625"
W.T.	0.280"

WELD INSPECTION (GAS STD.D-40)*
☒ RADIOGRAPHIC:
☐ 20% MIN. (% OF EACH WELDER'S
☒ 100% DAILY WORK)
*VISUALLY INSPECT 100% OF ALL WELDS THAT ARE NOT RADIOGRAPHICALLY INSPECTED. (THIS REQUIREMENT APPLIES EVEN IF NO RADIOGRAPHIC INSPECTION IS REQUIRED.)

JOB NO.	41921654
BOM #	103
DESIGN CRITERIA	
LOCATION CLASS	3
DESIGN FACTOR	0.5
FDP	720 PSIG 16.67 % SMYS
MAOP	388 PSIG 8.98 % SMYS
STRENGTH TEST PRESSURE	
MAX.	1100 PSIG 25.46 % SMYS
MIN.	1080 PSIG 25.00 % SMYS
	3888 PSIG=90% SMYS
TEST MEDIUM	WATER
PIPE SPEC	API 5L, GR B, SMLS
O.D.	3.500"
W.T.	0.216"

WELD INSPECTION (GAS STD.D-40)*
☐ RADIOGRAPHIC:
☐ 20% MIN. (% OF EACH WELDER'S
☐ 100% DAILY WORK)
*VISUALLY INSPECT 100% OF ALL WELDS THAT ARE NOT RADIOGRAPHICALLY INSPECTED. (THIS REQUIREMENT APPLIES EVEN IF NO RADIOGRAPHIC INSPECTION IS REQUIRED.)

SAFETY

SAFETY PLEDGE

I ALWAYS PUT SAFETY FIRST.
I LOOK FOR AND ACT TO RESOLVE UNSAFE SITUATIONS.
I HELP AND ENCOURAGE OTHERS TO ACT SAFELY.

GTS
575 Lennon Ln. #250
Walnut Creek, CA (925) 478-8530
www.gtsinc.us
Project No. 13195

ISSUED FOR PERMIT
NOT
APPROVED FOR CONSTRUCTION

BILL OF MATERIAL

Item Number	Description	PG&E Material Code	Units	Quantity	Catalog or Drawing Reference
	EXPENSE ORDER #41921654				
101	Pipe, 12.750" OD x 0.281" WT, API 5L, X-52, HFW, FBE Coated	M010935	Ft.	10	GAS STD A-15
102	Pipe, 6.625" OD x 0.280" WT, API 5L, GR B, SMLS, FBE Coated	M010014	Ft.	60	GAS STD A-15
103	Pipe, 3.500" OD x 0.216" WT, API 5L, GR B, SMLS, Bare	M011692	Ft.	20	GAS STD A-15
111	Elbow, 12.750" OD x 0.281" WT, GR Y-52, 90 Deg, LR	M021414	Ea.	1	GAS STD B-20.2
112	Elbow, 6.625" OD x 0.280" WT, GR B, 90 Deg, LR	M022091	Ea.	6	GAS STD B-20
113	Elbow, 6.625" OD x 0.280" WT, GR B, 45 Deg, LR	M022158	Ea.	2	GAS STD B-20
114	Elbow, 3.500" OD x 0.216" WT, GR B, 90 Deg, LR	M022103	Ea.	1	GAS STD B-20
121	Cap, 12.750" OD x 0.281" WT, GR Y-52	M022223	Ea.	1	GAS STD B-20.2
122	Cap, 6.625" OD x 0.280" WT, GR B	M022038	Ea.	1	GAS STD B-20
123	Cap, 3.500" OD x 0.216" WT, GR B	M022078	Ea.	2	GAS STD B-20
131	Tee, Straight, 3.500" OD x 0.216" WT, GR B	M022137	Ea.	1	GAS STD B-20
141	Reducer, Concentric 12.750" x 6.625" OD X 0.375" x 0.280" WT, GR B	M022216	Ea.	1	GAS STD B-20
151	Flange, 6", Weldneck, RF, ANSI 300	M025187	Ea.	1	GAS STD B-43
161	Flange, 6", Blind, RF, ANSI 300	M020865	Ea.	2	GAS STD B-43.2
162	Flange, 4", Blind, RF, ANSI 300	M020862	Ea.	1	GAS STD B-43.2
163	Flange, 3", Blind, RF, ANSI 300	M020860	Ea.	4	GAS STD B-43.2
164	Flange, 3", Weldneck, RF, ANSI 300	M025313	Ea.	2	Gas STD B-43
171	Bolt, 0.750" x 5", Stud, with matching Nut, for 6" ANSI 300 Flanges	M192742	Ea.	24	GAS STD B-46
172	Bolt, 0.750" x 4 1/2", Stud, with matching Nut, for 4" ANSI 300 Flanges	M192514	Ea.	8	GAS STD B-46
173	Bolt, 0.750" x 4 1/4", Stud, with matching Nut, for 3" ANSI 300 Flanges	M192697	Ea.	32	GAS STD B-46
180	Save-A-Valve Nipple, 1"	M022287	Ea.	3	GAS STD C-14
181	Save-A-Valve Nipple, 2"	M022289	Ea.	3	GAS STD C-14
191	Gasket, 6", PSI Linebacker Type F, for 6" ANSI 300 Flanges	M016689	Ea.	3	GAS STD B-45.1
192	Gasket, 4", PSI Linebacker Type F, for 4" ANSI 300 Flanges	M016688	Ea.	2	GAS STD B-45.1
193	Gasket, 3", PSI Linebacker Type F, for 3" ANSI 300 Flanges	M016687	Ea.	6	GAS STD B-45.1
211	Nipple 1/2" x 3" Long, API 5L, GR B, EH	M021173	Ea.	7	GAS STD B-13.1
212	Valve, Ball, 1/2", 2,000 psig MWP, Threaded, KF Contromatics	M034408	Ea.	7	GAS STD F-20
213	Plug, 1/2", Forged Steel, Hex Head, Threaded	M021249	Ea.	7	GAS STD B-10.1
240	Coupon Test Station	M560691	Ea.	1	GS&S O-10.2
241	Royston 4' x 4' Handy Cap, 24 Carton	M562324	Ea.	4	GS&S E-27
242	Liquid Adhesive, Royston Roybond 747, 16oz Spray Can, 12 Per Carton	M130850	Ea.	1	GS&S E-27
243	Sleeve, Copper, Thermoweld A200 or Equivalent	M303755	Ea.	4	GS&S O-10
244	Cartridges, Cadweld CA-15, or Thermoweld 15P, 15-Gram, 20 Per Box	M159260	Ea.	4	GS&S O-10
245	Wire, 500' Coil, #10, HMWPE With 30 Mil Thickness, Solid Copper, Black Insulation	M294991	Ft.	500	GS&S O-10

MATERIAL OF RECORD

No.	Description	Units	Quantity
1	Pipe, 6.625" OD x 0.188" WT*, 30,000 SMYS*, ERW	Ft.	3656
2	Tap, 1.660" OD, Valve Tee		
	Pipe 1.050" OD 0.113 WT*, 28,000 SMYS*, BUTT WELD*	Ft.	0.5
3	Tap, 1" Valve Tee		
	Pipe 1.050" OD x 0.113 WT, API 5L, GR-B, SMLS	Ft.	0.5
4	Tap, 1" Valve Tee		
	Pipe 1.050" OD x 0.113 WT, API 5L, GR-B, SMLS	Ft.	0.5
5	Tap, 1" Valve Tee		
	Pipe 1.050" OD 0.113 WT*, 28,000 SMYS*, BUTT WELD*	Ft.	0.5
6	Tap, 1" Mueller H-17656 (DREG 5236)	Ea.	1
7	Tap, 1" Mueller H-17656 (DREG 5235)	Ea.	1
8	Tap, 1" Valve Tee		
	Pipe 1.050" OD 0.113 WT*, 28,000 SMYS*, BUTT WELD*	Ft.	0.5
	Location A - Blowdown Test		
9	Pipe, 3.500" OD x 0.216" WT, GR-B, ERW	Ft.	113
	Mfg Bend, Elbow, 3.500" OD x 0.216" WT Welding, 90 deg., L.R. Std., 30,000 SMYS*	Ea.	2
	Tee, Welding, Std. 3" x 3" x 3", 3.500" OD x 0.216 WT, 30,000 SMYS*	Ea.	1
	Reducer, Concentric, 4.500" x 3.500" OD X 0.188" x 0.188" WT*, 30,000 SMYS*	Ea.	1
	Flange, 4", Weld Neck, ASA 300 lbs.	Ea.	1

* ASSUMED VALUES PER PG&E TECHNICAL GUIDANCE SPECIFICATION, RESOLVING UNKNOWN PIPELINE FEATURES, 12/05/2012

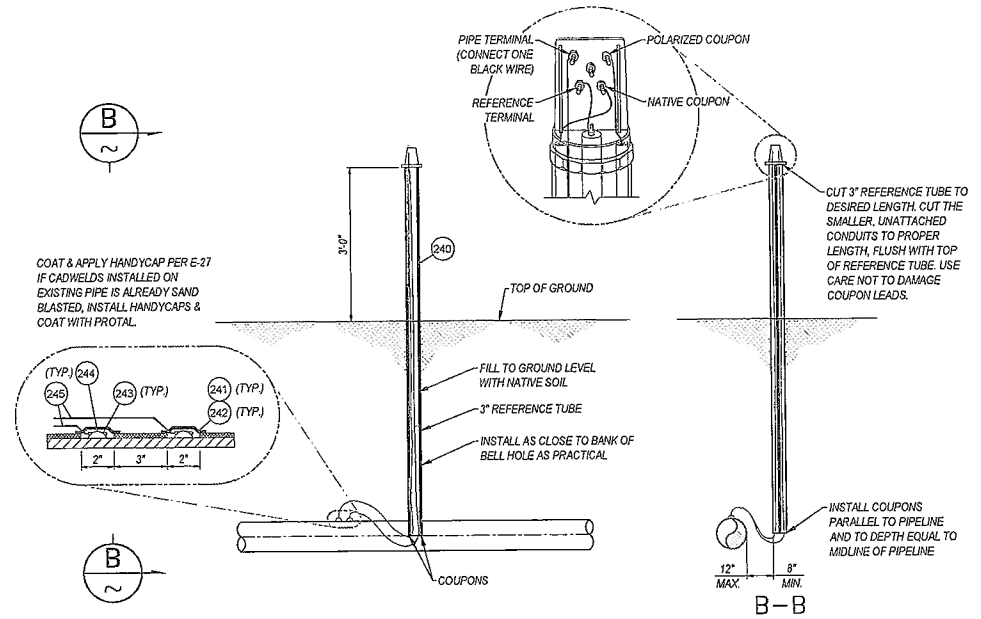

DETAIL 11 SHT 4 — COUPON TEST STATION
NOT TO SCALE — GS&S O–10.2

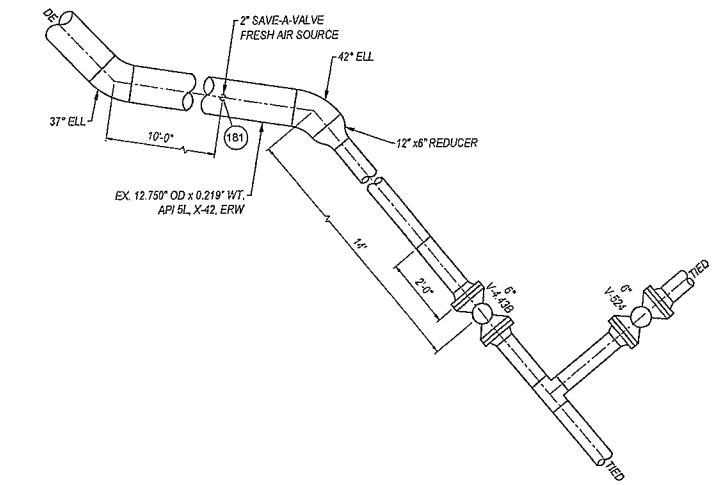

DETAIL 12 SHT 2 — 2" SAVE–A–VALVE FOR SNIFF HOLE
SCALE: 3/8" = 1' — LOC C: 19071 N LOWER SCARAMENTO RD

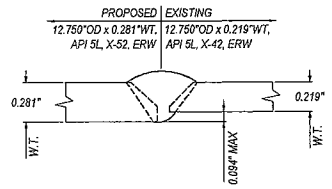

DETAIL 8 SHT 4 — WELD DETAIL
NOT TO SCALE — GS&S D–22, FIG. 2

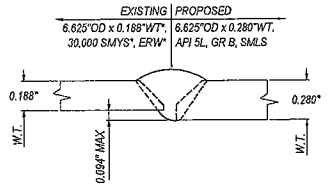

DETAIL 9A SHT 4 — WELD DETAIL
NOT TO SCALE — GS&S D–22, FIG. 2

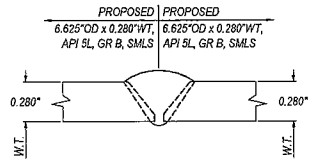

DETAIL 9B SHT 4 — WELD DETAIL
NOT TO SCALE — GS&S D–22, FIG. 2

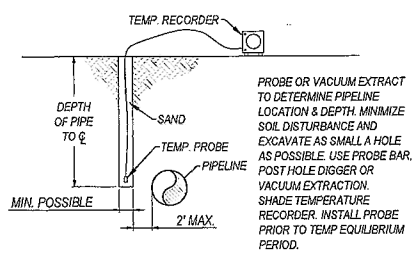

PROBE OR VACUUM EXTRACT TO DETERMINE PIPELINE LOCATION & DEPTH. MINIMIZE SOIL DISTURBANCE AND EXCAVATE AS SMALL A HOLE AS POSSIBLE. USE PROBE BAR, POST HOLE DIGGER OR VACUUM EXTRACTION. SHADE TEMPERATURE RECORDER. INSTALL PROBE PRIOR TO TEMP EQUILIBRIUM PERIOD.

DETAIL 5 SHT 2 — TEMPERATURE PROBE
NOT TO SCALE — MIN. 100' FROM TEST STATION

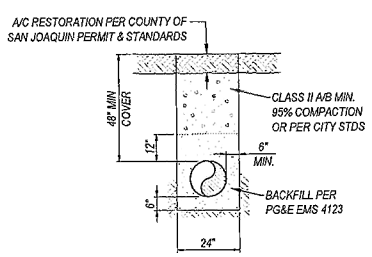

DETAIL — TYPICAL TRENCH — PAVED AREA
NOT TO SCALE

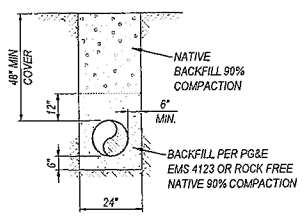

DETAIL — TYPICAL TRENCH — NON–PAVED AREA
NOT TO SCALE

SAFETY

SAFETY PLEDGE

I ALWAYS PUT SAFETY FIRST.
I LOOK FOR AND ACT TO RESOLVE UNSAFE SITUATIONS.
I HELP AND ENCOURAGE OTHERS TO ACT SAFELY.

PG&E

GTS
575 Lennon Ln. #250
Walnut Creek, CA (925) 478-8530
www.gtsinc.us
Project No. 13195

ISSUED FOR PERMIT
NOT
APPROVED FOR CONSTRUCTION

NOTE:
WARNING: CONFIDENTIAL, PROPRIETARY INFORMATION THIS DOCUMENT CONTAINS CONFIDENTIAL, PROPRIETARY INFORMATION THAT IS THE SOLE PROPERTY OF PACIFIC GAS AND ELECTRIC COMPANY AND IS INTENDED FOR USE ONLY BY AUTHORIZED PACIFIC GAS AND ELECTRIC COMPANY EMPLOYEES & AGENTS. COPYRIGHT PACIFIC GAS AND ELECTRIC COMPANY.

811 Know what's below. Call before you dig.

NO.	DATE	DESCRIPTION	GM/SPEC	DWN	CHKD	SUPV	APVD BY
A		ISSUED FOR PERMIT	41921654				

REVISIONS

APPROVED BY: GM 41921654; SUPV; DSGN; DWN DWY; CHKD JAB; OK DAA; DATE; SCALES AS SHOWN

HYDROTEST T–345B–14
L–197B
MP 4.75 – 5.49
WOODBRIDGE, CALIFORNIA

PACIFIC GAS AND ELECTRIC COMPANY
SAN RAMON, CALIFORNIA

BILL OF MATL SHEET 05
DWG LIST
SUPSDS
SUPSD BY
SHEET NO. 05 OF 05 SHEETS

41921654 A

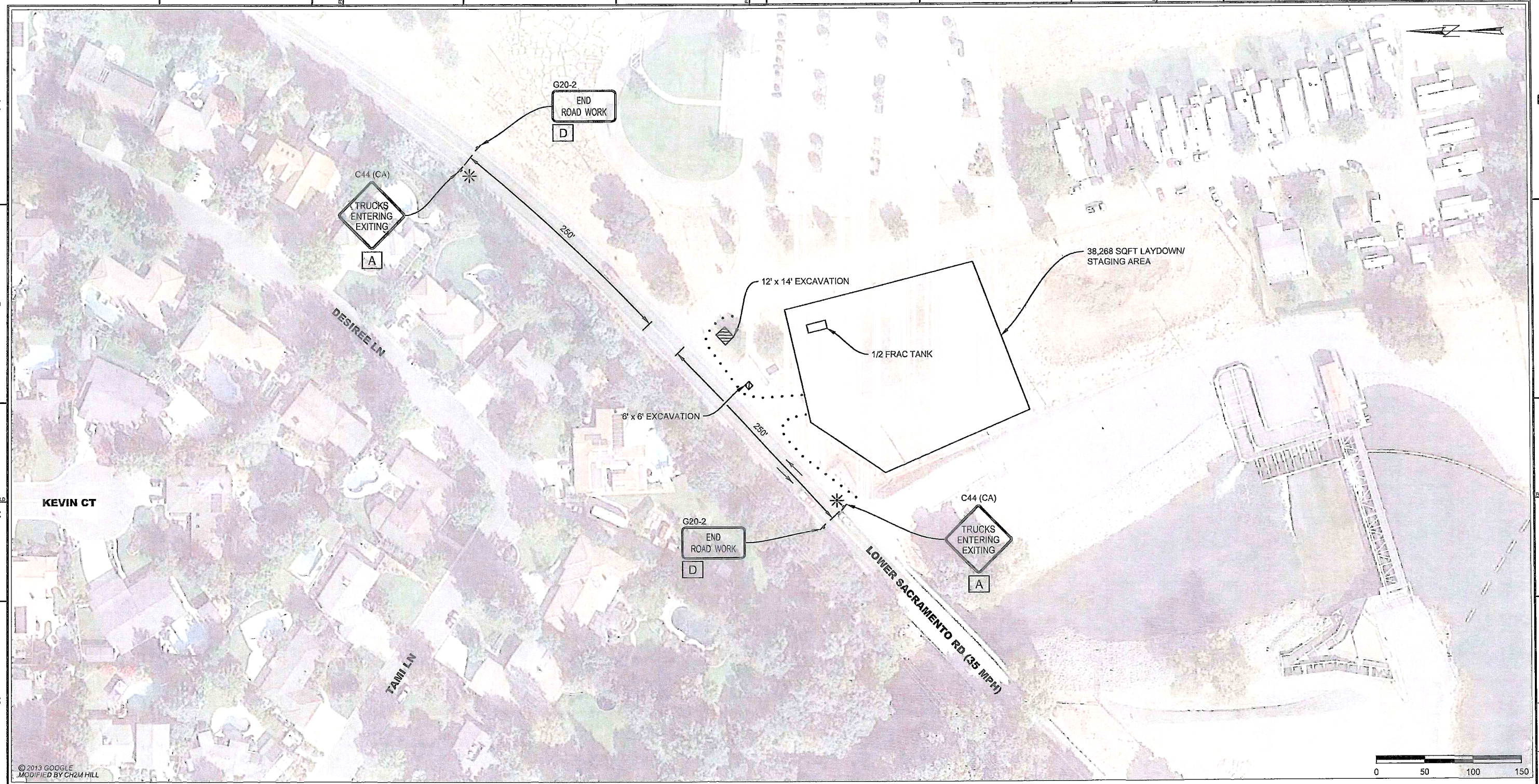

CONTRACTOR NOTES:

1. ALL TRAFFIC CONTROL DEVICES SHALL CONFORM TO THE LATEST EDITION OF CALIFORNIA MANUAL OF UNIFORM TRAFFIC CONTROL DEVICES (MUTCD) AND CALTRANS STANDARD PLANS AND SPECIFICATIONS.
2. THE LOCAL FIRE DEPARTMENT, SHERIFF/POLICE DEPARTMENT, CALIFORNIA HIGHWAY PATROL, LOCAL SCHOOL DISTRICT, TRANSIT SERVICE PROVIDERS AND UNITED STATES POSTAL SERVICE SHALL BE NOTIFIED 72 HOURS IN ADVANCE OF CONSTRUCTION WORK.
3. THE CONTRACTOR IS SOLELY RESPONSIBLE FOR THE REPAIR OF ANY DAMAGE TO EXISTING IMPROVEMENTS RESULTING FROM THE CONTRACTOR'S OPERATION. THIS REPAIR SHALL INCLUDE ALL CONSTRUCTION AND MATERIALS TO RESTORE THE SITE TO EXISTING CONDITIONS.
4. EACH ADVANCED WARNING SIGN ON EACH SIDE OF THE ROADWAY SHALL BE EQUIPPED WITH AT LEAST TWO FLAGS. FLASHING BEACONS SHALL BE PLACED AT THE LOCATION INDICATED FOR LANE CLOSURE DURING HOURS OF DARKNESS.
5. ALL WORKERS SHALL BE EQUIPPED WITH A REFLECTIVE VEST AND HARD HAT. ALL FLAGGERS SHALL ALSO BE EQUIPPED WITH A C28 "STOP/SLOW" PADDLE AND SHALL BE TRAINED IN THE PROPER FUNDAMENTALS OF FLAGGING TRAFFIC.
6. NO PARKING SIGNS SHALL BE PLACED 72 HOURS PRIOR TO SET UP. SIGNS SHALL BE POSTED EVERY 20 LINEAR FEET OF OCCUPIED SPACE WITH AT LEAST ONE SIGN AT EACH END OF OCCUPIED SPACE.
7. ANY CONFLICTING SIGNS WILL BE COVERED FOR THE LENGTH OF THE JOB.
8. CONTRACTOR SHALL MAINTAIN EMERGENCY VEHICLE AND DRIVEWAY ACCESS AT ALL TIMES.
9. Y&C TRANSPORTATION CONSULTANTS, INC. ASSUMES NO LIABILITY WHEN CONTRACTOR DOES OWN SET UP OR MAKES CHANGES TO THE ORIGINAL TRAFFIC CONTROL PLAN.
10. COUNTY/STATE ENGINEER OR HIS REPRESENTATIVE HAS THE AUTHORITY TO INITIATE FIELD CHANGES TO ASSURE PUBLIC SAFETY.
11. CONTRACTOR SHALL PLATE THE EXCAVATED AREA AFTER WORKING HOURS.

LEGEND

= TRAFFIC FLOW DIRECTION
= TEMPORARY SIGN POST
= PORTABLE FLASHING BEACON
= WORK ZONE

SIGN PANEL SIZE

A	48" X 48"
D	48" X 24"

REGISTERED PROFESSIONAL ENGINEER
K. DANIEL YAU
No. 74611
Exp. 3/31/14
CIVIL
STATE OF CALIFORNIA

01/29/14

NO.	DATE	DESCRIPTION	GM/SPEC	DWN	CHKD	SUPV	APVD BY
1	01/30/14	REVISED FOR PERMIT	41921654	DOC	ET	KDY	
0	01/29/14	ISSUED FOR PERMIT	41921654	DOC	ET	KDY	

REVISIONS

APPROVED BY	GM	41921654
	SUPV	
	DSGN	ET
DOC	DWN	DOC
	CHKD	ET
ET	OK	KDY
KDY	DATE	01/29/14
	SCALES	AS SHOWN

HYDROTEST T-345B-14
L-197B, LOCATION A
MP 4.75 – 5.49
SAN JOAQUIN COUNTY, CALIFORNIA

PACIFIC GAS AND ELECTRIC COMPANY
WALNUT CREEK, CALIFORNIA

MICROFILM
BILL OF MATL
DWG LIST
SUPSDS
SUPSD BY
SHEET NO. 1 OF 2 SHEETS

41921654 | 0

C:\Users\etam\Desktop\PGE\2013-Hydro\T-345B-14\T-345B-14_LOC-A.dwg, 1/30/2014 7:59:07 AM

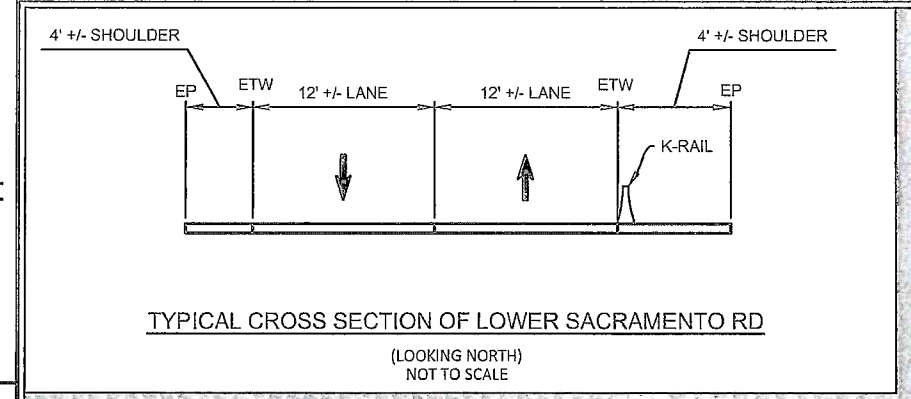

TYPICAL CROSS SECTION OF LOWER SACRAMENTO RD

(LOOKING NORTH)
NOT TO SCALE

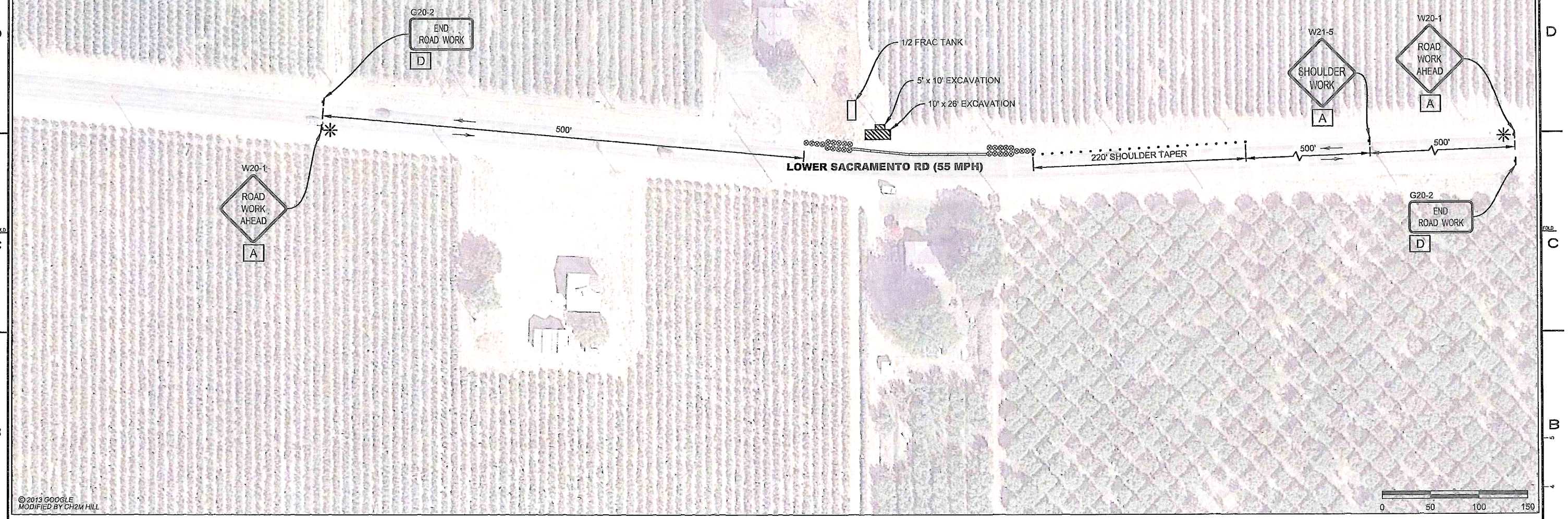

CONTRACTOR NOTES:

1. ALL TRAFFIC CONTROL DEVICES SHALL CONFORM TO THE LATEST EDITION OF CALIFORNIA MANUAL OF UNIFORM TRAFFIC CONTROL DEVICES (MUTCD) AND CALTRANS STANDARD PLANS AND SPECIFICATIONS.
2. THE LOCAL FIRE DEPARTMENT, SHERIFF/POLICE DEPARTMENT, CALIFORNIA HIGHWAY PATROL, LOCAL SCHOOL DISTRICT, TRANSIT SERVICE PROVIDERS AND UNITED STATES POSTAL SERVICE SHALL BE NOTIFIED 72 HOURS IN ADVANCE OF CONSTRUCTION WORK.
3. THE CONTRACTOR IS SOLELY RESPONSIBLE FOR THE REPAIR OF ANY DAMAGE TO EXISTING IMPROVEMENTS RESULTING FROM THE CONTRACTOR'S OPERATION. THIS REPAIR SHALL INCLUDE ALL CONSTRUCTION AND MATERIALS TO RESTORE THE SITE TO EXISTING CONDITIONS.
4. EACH ADVANCED WARNING SIGN ON EACH SIDE OF THE ROADWAY SHALL BE EQUIPPED WITH AT LEAST TWO FLAGS. FLASHING BEACONS SHALL BE PLACED AT THE LOCATION INDICATED FOR LANE CLOSURE DURING HOURS OF DARKNESS.
5. ALL WORKERS SHALL BE EQUIPPED WITH A REFLECTIVE VEST AND HARD HAT. ALL FLAGGERS SHALL ALSO BE EQUIPPED WITH A C28 "STOP/SLOW" PADDLE AND SHALL BE TRAINED IN THE PROPER FUNDAMENTALS OF FLAGGING TRAFFIC.
6. NO PARKING SIGNS SHALL BE PLACED 72 HOURS PRIOR TO SET UP. SIGNS SHALL BE POSTED EVERY 20 LINEAR FEET OF OCCUPIED SPACE WITH AT LEAST ONE SIGN AT EACH END OF OCCUPIED SPACE.
7. ANY CONFLICTING SIGNS WILL BE COVERED FOR THE LENGTH OF THE JOB.
8. CONTRACTOR SHALL MAINTAIN EMERGENCY VEHICLE AND DRIVEWAY ACCESS AT ALL TIMES.
9. Y&C TRANSPORTATION CONSULTANTS, INC. ASSUMES NO LIABILITY WHEN CONTRACTOR DOES OWN SET UP OR MAKES CHANGES TO THE ORIGINAL TRAFFIC CONTROL PLAN.
10. COUNTY/STATE ENGINEER OR HIS REPRESENTATIVE HAS THE AUTHORITY TO INITIATE FIELD CHANGES TO ASSURE PUBLIC SAFETY.
11. CONTRACTOR SHALL FENCE AROUND THE EXCAVATED AREA IF NOT PLATED AFTER WORKING HOURS.

LEGEND

- = TRAFFIC FLOW DIRECTION
- = TEMPORARY SIGN POST
- = PORTABLE FLASHING BEACON
- = WORK ZONE
- = TEMPORARY CONCRETE BARRIER (TYPE K)
- = CRASH CUSHION (ARRAY 'TB14)
- = CHANNELIZER (SPACING PER TABLE 3 ON CALTRANS STANDARD PLAN SHEET 13)

SIGN PANEL SIZE

A	48" X 48"
D	48" X 24"

K. DANIEL YAU
No. 44611
Exp. 3/31/14
CIVIL
REGISTERED PROFESSIONAL ENGINEER
STATE OF CALIFORNIA
01/29/14

MICROFILM

NO.	DATE	DESCRIPTION	GM/SPEC	DWN	CHKD	SUPV	APVD BY
1	01/30/14	REVISED FOR PERMIT	41921654	DOC	ET	KDY	
0	01/29/14	ISSUED FOR PERMIT	41921654	DOC	ET	KDY	

REVISIONS

APPROVED BY	GM	41921654
	SUPV	
	DSGN	ET
DOC	DWN	DOC
	CHKD	ET
ET	OK	KDY
KDY	DATE	01/29/14
	SCALES	AS SHOWN

HYDROTEST T-345B-14
L-197B, LOCATION B
MP 4.75 – 5.49
SAN JOAQUIN COUNTY, CALIFORNIA

PACIFIC GAS AND ELECTRIC COMPANY
WALNUT CREEK, CALIFORNIA

BILL OF MATL	
DWG LIST	
SUPSDS	
SUPSD BY	
SHEET NO.	2 OF 2 SHEETS

41921654 | 0

C:\Users\eliam\Desktop\PGE\2013-Hydro\T-345B-14\T-345B-14_LOC-B.dwg, 1/30/2014 9:08:33 AM